epoke®
GROUP

IGLOO S2400

– the safe way!

IGLOO S2400

- easy to operate and service-friendly

The IGLOO S2400 series is ideal for spreading salt and sand and other materials generally used for the treatment of icy roads.

IGLOO S2400 is width/amount-compensated and road-independent (synchronous), which means that the set spreading amount per m^2 remainsw constant regardless of changes in spreading width or vehicle speed.

The IGLOO series is well-known for its simple design, with a manageable engine compartment that makes it service-friendly, easy to maintain and keeps operational costs low.

The belt spreader's low deadweight and low centre of gravity makes it ideal for fitting to smaller trucks and carrying vehicles.

- Simple design
- Manageable engine compartment
- Low centre of gravity
- Improved driveability
- Low deadweight
- Optimal centre of gravity positioning
- Easy operation and servicing

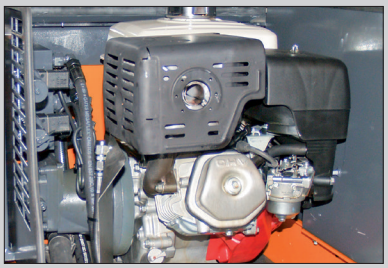

IGLOO is supplied with a Honda petrol engine or a Hatz diesel engine.

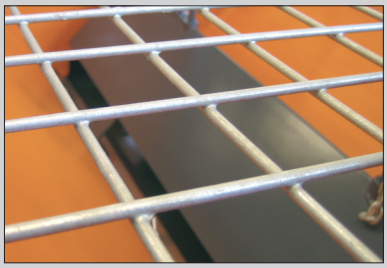

A stress relief plate minimises the weight of the material on the belt (optional).

Available with long rear end for optimal centre of gravity positioning.
Stainless steel spreading disc and funnel.

OPTIONS

- Long rear end 800 l and 1100 l
- Pre-wetting unit
- Diesel or petrol engine
- Foldable tarpaulin
- Electrically controlled symmetry
- Unloading systems
- Stainless steel version
- Stress relief plate*
- Centre of gravity stabilisation*
- Hopper extension frame
- EpoMaster X1
- EpoMini X1
- EpoSat - GPS-controlled spreading
- Data acquisition
- Variable pre-wetting
- Trailer hitched*

(*Does not apply to a 600 l).

Improved protection of the engine compartment.

The belt spreader is operated as standard using an EpoMini X1 remote control.

Optional: EpoMaster X1, which provides option for GPS-controlled spreading and data acquisition.

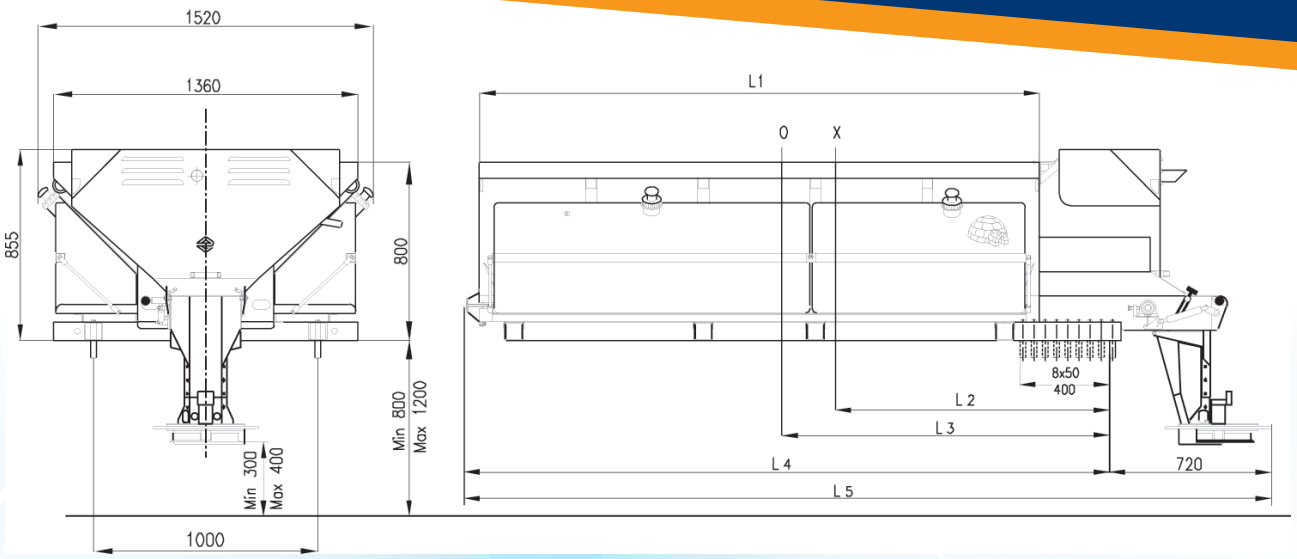

S2400		L1	L2 standard	L2 long	L3 standard	L3 long	L4 standard	L4 long	L5 standard	L5 long
600 l	without liquid tank without hopper extension frame	1100	460		760		1605		2205	
	without liquid tank without hopper extension frame		525		825					
	without liquid tank without hopper extension frame		550		850					
	without liquid tank without hopper extension frame		495		795					
800 l	without liquid tank without hopper extension frame	1500	590	1059	1007	1495	2005	2505	2605	3105
	with liquid tank without hopper extension frame		667	1141	1048	1536				
	with liquid tank with hopper extension frame		687	1161	1071	1559				
	without liquid tank with hopper extension frame		618	1087	1045	1533				
800 l	without liquid tank without hopper extension frame	1500	590	1059	1007	1495	2005	2505	2605	3105
	with liquid tank without hopper extension frame		667	1141	1048	1536				
	with liquid tank with hopper extension frame		687	1161	1071	1559				
	without liquid tank with hopper extension frame		618	1087	1045	1533				
1100 l	without liquid tank without hopper extension frame	2000	868	1330	1279	1769	2505	3005	3105	3605
	with liquid tank without hopper extension frame		935	1404	1314	1803				
	with liquid tank with hopper extension frame		955	1424	1348	1837				
	without liquid tank with hopper extension frame		895	1357	1340	1830				
1400 l	without liquid tank without hopper extension frame	2500	1020		1424		3005		3605	
	with liquid tank without hopper extension frame		1080		1455					
	with liquid tank with hopper extension frame		1100		1476					
	without liquid tank with hopper extension frame		1047		1459					

Epoke A/S
Vejenvej 50
6600 Vejen,
Denmark

epoke® GROUP

0437.2020.lr